Features

- Explosion-proof NEMA 4X, IP65, Type 4 enclosure for outdoor and indoor installations.
- Optional tapped exhaust port vents exhaust gas.
- Canadian Registration Numbers (CRN) certification for all territories and provinces.
- Does not contain copper-based metals.
- Compact size for use in restricted areas.
- Internal electronic feedback maintains precise output pressure control.
- Piezoelectric actuator disk provides stability regardless of vibration or position.
- RFI/EMI protection eliminates susceptibility to elecromagnetic interference.
- Optional version approved for use with Natural Gas or Industrial Methane as a supply media.
- Encapsulated critical components designed to make unit moisture resistant in tough environments

Operating Principles

The Model TXI7850 Transducer is an electronically controlled pressure sensitive device that converts a current signal to a pneumatic output. This device is composed of the Primary Converting Section and the Relay Section. The Piezoelectric ceramic disk in the Primary Section functions as a flapper. The flapper and the nozzle work together to control the signal pressure in the Relay Section. The signal pressure acts on a diaphragm assembly that controls the pressure in the output chamber.

The output pressure is sensed by the lower control diaphragm to maintain the output pressure. The output pressure is also sensed by the feedback control circuit, which compares the output pressure and input signal (setpoint) to maintain constant output pressure.

The Damping Adjustment on the PC Board allows tuning the transducer for optimum response and stability. Large downstream volumes generally require more damping to achieve output pressure stability.

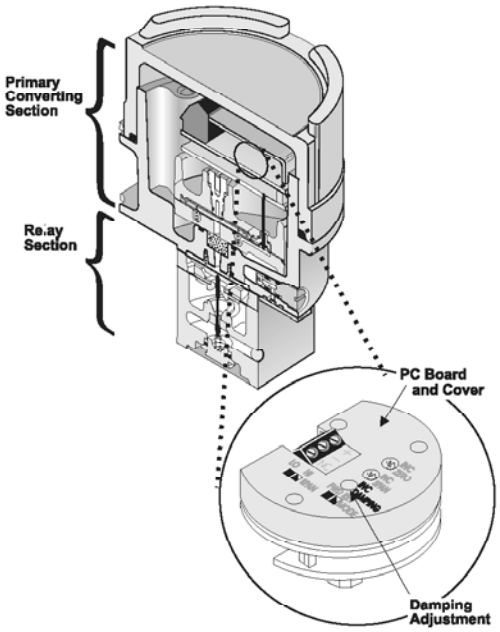

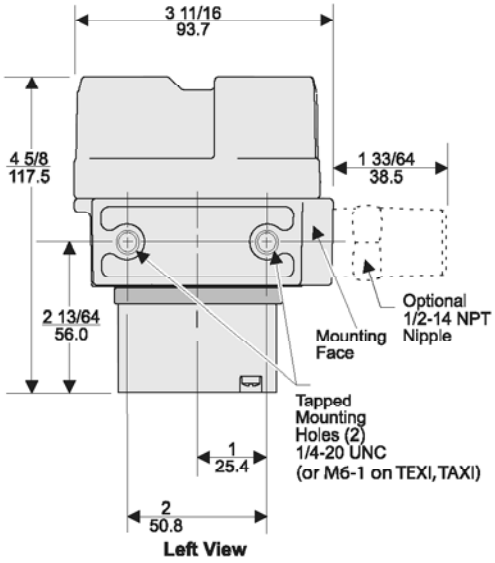

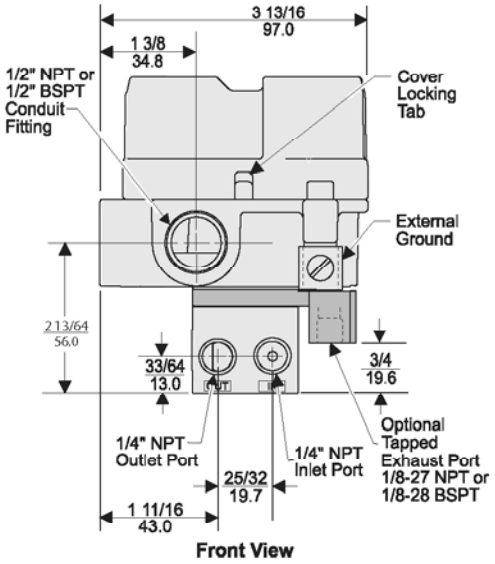

Specifications

		SET POINT			
	psig [BAR] (kPa)	3 [0.2] (20)	9 [0.6] (60)	15 [1.0] (100)	30 [2.0] (200)
Maximum Air Consumption	SCFH	3.5 (.10 m³/HR)	7.0 (.20 m³/HR)	9.5 (.27 m³/HR)	13.5 (.38 m³/HR)
Flow Rate (SCFM)		2.5 (4.25 m³/HR) @ 25 psig, [1.7 BAR], (170 kPa) supply & 9 psig, [0.6 BAR], (60 kPa) Output	OR	9.0 (15.3 m³/HR) @ 120 psig, [8.0 BAR], (800 kPa) supply & 9 psig, [0.6 BAR], (60 kPa) Output	
Temperature Range	Operating	-40°F to + 160°F, (-40°C to + 71.2°C)			
	Storage	-40°F to + 180°F, (-40°C to + 82.2°C)			
Span/Zero Adjustments		Screwdriver adjustments located under cover			

	OUTPUT RANGE		
psig [BAR] (kPa)	3-15 [0.2-1.0] (20-100)	3-27 [0.2-1.8] (20-180)	6-30 [0.4-2.0] (40-200)
Input Range	4-20 mA		
Supply Pressure[1,2]	20-120 [1.5-8.0] (150-800)	32-120 [2.2-8.0] (220-800)	35-120 [2.4-8.0] (240-800)
Minimum Span	5 [0.35] (35)	10 [0.7] (70)	10 [0.7] (70)
Frequency Response	-3 db @ 5 Hz per ISA S26.4.3.1 load configuration A.		
Required Operating Voltages	7.2 VDC @ 20 mA (4-20 mA signal)		
Accuracy (ISA S51.1)	0.25% Full Scale Guaranteed 0.15% Full Scale Typical		
Hysteresis (ISA S51.1)	≤ 0.1% Full Scale		
Deadband	≤ 0.02% Full Scale		
Repeatability (ISA S51.1)	≤ 0.1% Full Scale		
Position Effect	No Measurable Effect		
Vibration Effect	Less than ±1% of Span under the following conditions: 5-15 Hz @ 0.75 inches constant displacement 15-500 Hz @ 10 Gs.		
Reverse Polarity Protection	No damage occurs from reversal of normal supply current (4-20 mA) or from misapplication of up to 60 mA.		
RFI/EMI Effect	Less than 0.5% of span @ 30 V/m class 3 Band ABC (20-1000 mHz) per SAMA PMC 33.1 1978 and less than 0.5% of Span @ 10 V/m level, to 2 GHz Band per EN 61000-4-3:1998 +A1 EMC Directive 89/336/EEC European Norms EN 61326		
Supply Pressure Effect	No Measurable Effect		
Temperature Effect	[+0.5% +0.04% / °F Temperature Change] of Span typical		
Materials of Construction	Body and Housing . . . . . Chromate Treated Aluminum Orifice . . . . . Aluminum & Sapphire Trim . . . . . Stainless Steel & Zinc Plated Steel Elastomers . . . . . Nitrile Finish . . . . . Epoxy Powder Coating		

[1] *Supply Pressure must be no less than 5 psig, [0.35 BAR], (35 kPa), above maximum output.*

[2] *ATEX Approved unit 40 psig, [2.8 BAR], (280 kPa). ATEX Approved unit with "N" option 125 psig, [8.5 BAR], (850 kPa) for air or Group IIA Gases.*

Extended Range Specifications

		SET POINT				
	psig [BAR] (kPa)	0 [0] (0)	15 [1.0] (100)	30 [2.0] (200)	60 [4.0] (400)	120 [8.0] (800)
Maximum Air Consumption	0-30 psig SCFH	3.1 (.09 m³/HR)	7.8 (.22 m³/HR)	11.8 (.33 m³/HR)		
	0-60 psig SCFH	1.6 (0.4 m³/HR)	4.7 (.13 m³/HR)	7.8 (.22 m³/HR)	13.3 (.37 m³/HR)	
	0-120 psig SCFH	0.5 (.01 m³/HR)		3.8 (.11 m³/HR)	7.6 (.21 m³/HR)	15.1 (.42 m³/HR)
Flow Rate (SCFM)		11.0 (18.7 m³/HR) @ 150 psig, [10 BAR], (1000 kPa) supply & midscale output				
Temperature Range	Operating Storage	-40°F to + 160°F, (-40°C to + 71.2°C) -40°F to + 180°F, (-40°C to + 82.2°C)				
Span/Zero Adjustments		Screwdriver adjustments located on front of unit				
Required Operating Voltages		**Two Wire Current Input** 7.2 VDC @ 20 mA (4-20 mA signal)				
Supply Voltages		**Three Wire Voltage Input** 7.2 - 30 VDC, less than 3 mA				
Signal Impedance		**Three Wire Voltage Input** 10 Kilohms				

	OUTPUT RANGE		
psig [BAR] (kPa)	0-30 [0-2.0] (0-200)	0-60 [0-4.0] (0-400)	0-120 [0-8.0] (0-800)
Input Range	4-20 mA DC, 0-10 VDC, 1-9 VDC		
Supply Pressure[1]	35-150 [2.4-10] (240-1000)	65-150 [4.6-10] (460-1000)	125-150 [8.8-10] (880-100)
Minimum Span	12.5 [0.85] (85)	25 [1.5] (150)	50 [3.0] (300)
Frequency Response	-3 db @ 2 Hz per ISA S26.4.3.1 load configuration A.		
Accuracy (ISA S51.1)	0.25% Full Scale Guaranteed 0.15% Full Scale Typical		
Hysteresis (ISA S51.1)	0.25% Full Scale		
Deadband	0.02% Full Scale		
Repeatability (ISA S51.1)	0.1% Full Scale		
Position Effect	0.125% @ 90° & 0.25% @ 180°		
Vibration Effect	Less than +1% of Span under the following conditions: 5-15 Hz @ 0.8 inches constant displacement 15-500 Hz @ 10 Gs.		
Reverse Polarity Protection	No damage occurs from reversal of normal supply current (4-20 mA) or from misapplication of up to 60 mA.		
RFI/EMI Effect EN	Less than 0.5% of span @ 30 V/m class 3 Band ABC (20-1000 mHz) per SAMA PMC 33.1 1978 and less than 0.5% of Span @ 10 V/m level, to 2 GHz Band per 61000-4-3:1998 +A1 EMC Directive 89/336/EEC European Norms EN 61326		
Supply Pressure Effect	< 0.1 psig change for 10 psig supply change		
Temperature Effect	[+0.5% +0.06% / °F Temperature Change] of Span typical		
Materials of Construction	Body and Housing. . . . . Chromate Treated Aluminum Orifice . . . . . Nickel Plated Brass & Sapphire Trim. . . . . Stainless Steel, Brass & Zinc Plated Steel Elastomers . . . . . Nitrile Finish. . . . . Epoxy Powder Coating		

[1] *Supply Pressure must be no less than 5 psig, [0.35 BAR], (35 kPa), above maximum output*

[2] *ATEX Approved unit 40 psig, [2.8 BAR], (280 kPa). ATEX Approved unit with "N" option 125 psig, [8.5 BAR], (850 kPa) for air or Group IIA Gases.*

Hazardous Area Classifications

	Explosion-Proof	Intrinsically Safe
Factory Mutual (FM) Approvals FM APPROVED	**Air as supply pressure media** Class I, Division 1, Groups B, C and D; Class II, Division 1, Groups E, F and G; Class III, Division 1, Fibers; Class I, Division 2, Groups A, B, C and D; Max. Ambient 65°C; Temperature Code T5; NEMA 4X Enclosure.	**Air as supply pressure media** Class I, Division I, Groups C and D; Class II, Division 1, Groups E, F and G; Class III, Division 1; Fibers; NEMA 4X Enclosure; Temperature Code T4 (Ta -40°C to + 66°C). T6 (Ta -40°C to + 40°C)
	Group D gases, including Natural Gas as supply pressure media Class I, Division 1, Groups C and D; Class II, Division 1, Groups E, F and G; Class I, Division 2, Groups A, B, C and D; Class II, Division 2, Groups E, F and G.	***Entity Parameters*** Vmax[1]= 30 VDC — Ci[3] = Zero Imax[2]= 200 mA — Li[4] = Zero [1]*Vmax = Max. Voltage* — [3]*Ci = Capacitance* [2]*Imax = Max. Current* — [4]*Li = Inductance*
Canadian Standards Association (CSA) Approvals	**Air as supply pressure media** Class I, Division 1, Groups B, C and D; Class II, Division 1, Groups E, F and G; Class I, Division 2, Groups A, B, C and D; Class II, Division 2, Groups E, F and G. Max. Ambient 65°C; Temperature Code T5; Type 4X Enclosure.	**Air as supply pressure media** Class I, Division 1, Groups C and D; Class II, Division 1, Groups E, F and G; Temperature Code T4A (Ta -40°C to + 66°C) Type 4X Enclosure; T6 (Ta -40°C to + 40°C). Rated 4-20 mA, 30 VDC maximum
	Group D gases, including Natural Gas as supply pressure media Class I, Division 1, Groups C and D; Class II, Division 1, Groups E, F and G; Class I, Division 2, Groups A, B, C and D. Class II, Division 2, Groups E, F and G. ***Factory Sealed***	***Approvals are valid when connected through a Shunt Zener Diode Safety Barrier meeting the following parametric requirements:*** System Type 1: Single Channel Polarized Rated: 28.5V Max. 300 Ohm Min. System Type 2: Dual Channel Polarized Rated 28.5V Max. 300 Ohm Min. and 28V Diode return per channel System Type 3: Dual Channel Polarized Rated: 28.5V Max. 300 Ohm Min. and 10V Max. 50 Ohm Min.
	Flame-Proof	**Intrinsically Safe**
Explosive Atmospheres Directive (ATEX) Approvals	**Air as supply pressure media** Ex II 2 GD EEx d IIB + H_2, T5 (-20°C to + 65°C)Ambient; IP65 Enclosure. 02ATEX1014	**Air as supply pressure media** Ex II 1 G (T4) II1D (T 85°C) EEx ia IIB, T4 (-40°C to +72°C)Ambient; IP65 Enclosure.
	Group IIA gases, including Natural Gas as supply pressure media Ex II 2 GD EEx d IIB , T5 (-20°C to + 65°C)Ambient; IP65 Enclosure.	***Transducer Parameters*** Umax[1]= 28 V — Pi[3] = 0.7 W — L_i[5] = 0 Imax[2]= 100 mA — Ci[4] = 0/C [1]*max = Max. Voltage* — [3]*Pi = Max. Power* — [5]*Li = Inductance* [2]*Imax = Max. Current* — [4]*Ci = Capacitance*
IECEx Approvals		**TEXI7850** Ex IIB T4 Gb (T4 -40°C to + 64°C) Ex IIIC T74°C Db IECEx SIR 09.0003 IP65 Enclosure ***Transducer Parameters*** Umax[1]= 28 V — Pi[3] = 0.7 W — L_i[5] = 0 Imax[2]= 100 mA — Ci[4] = 0 [1]*max = Max. Voltage* — [3]*Pi = Max. Power* — [5]*Li = Inductance* [2]*Imax = Max. Current* — [4]*Ci = Capacitance*

Mounting Kit

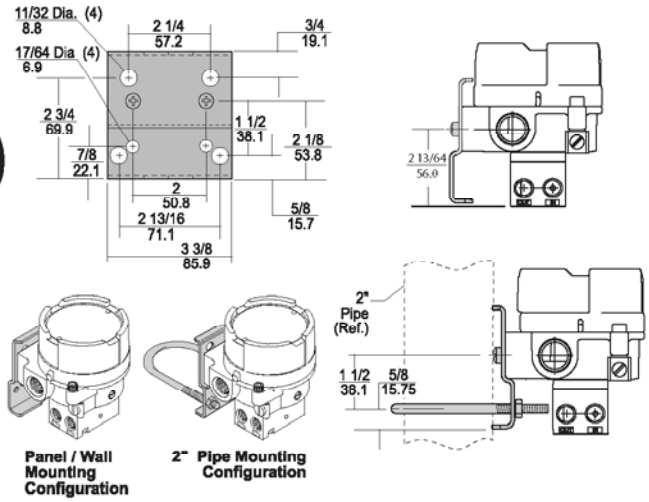

Model TXI7850 Transducer Kits & Accessories

Mounting Bracket Kits ..... 19021-1: TCXI7850, TFXI7850 (sold separately)
19021-2: TEXI7850 (sold separately)

Catalog Information

Catalog Number T [ ] XI785 [ ] [4] [ ] [ ] [ ]

Underwriting Group

Canadian Standard	C
ATEX	E
Factory Mutual	F

Temperature Range

-40°F to +160°F	0

Input

4-20 mA	4

Output

3-15 psig	01
3-27 psig	02
6-30 psig	03
0-30 psig	04
0-60 psig	05
0-120 psig	06
[0.2-1.0 BAR]	11
[0.2-1.8 BAR]	12
[0.4-2.0 BAR]	13
[0-2.0 BAR]	14
[0-4.0 BAR]	15
[0-8.0 BAR]	16
(20-100 kPa)	21
(20-180 kPa)	22
(40-200 kPa)	23
(0-200 kPa)	24
(0-400 kPa)	25
(0-800 kPa)	26

Options

Tapped Exhaust	E
Natural Gas media approval, Group D gases [4] (Includes Nipple; TCXI, TEXI, TFXI only) [1,2]	N
BSPT Thread [3]	U

20 ft cable length[4]	2
50 ft cable length[4]	5
100 ft cable length[4]	0

[1] *Not approved for Intrinsically Safe.*
[2] *Tapped Exhaust option required.*
[3] *Available for ATEX only. NOT available with "N" Option.*
[4] *10 ft cable standard. Longer lengths available. Contact factory for details and availability.*

Installation

For installation instructions, refer to the *Fairchild Model TXI7850 Explosion-proof Electro-pneumatic Transducer Installation, Installation Instructions*, II-5TXI7850.

For operation and maintenance instructions, refer to the *Fairchild Model TXI7850/7851 Explosion-proof Electro-pneumatic Transducer Operation and Maintenance Instructions*, OM-5TXI7850.